FSA ITA Release 4 Production Environment Logical Diagram
As of 12/31/2002

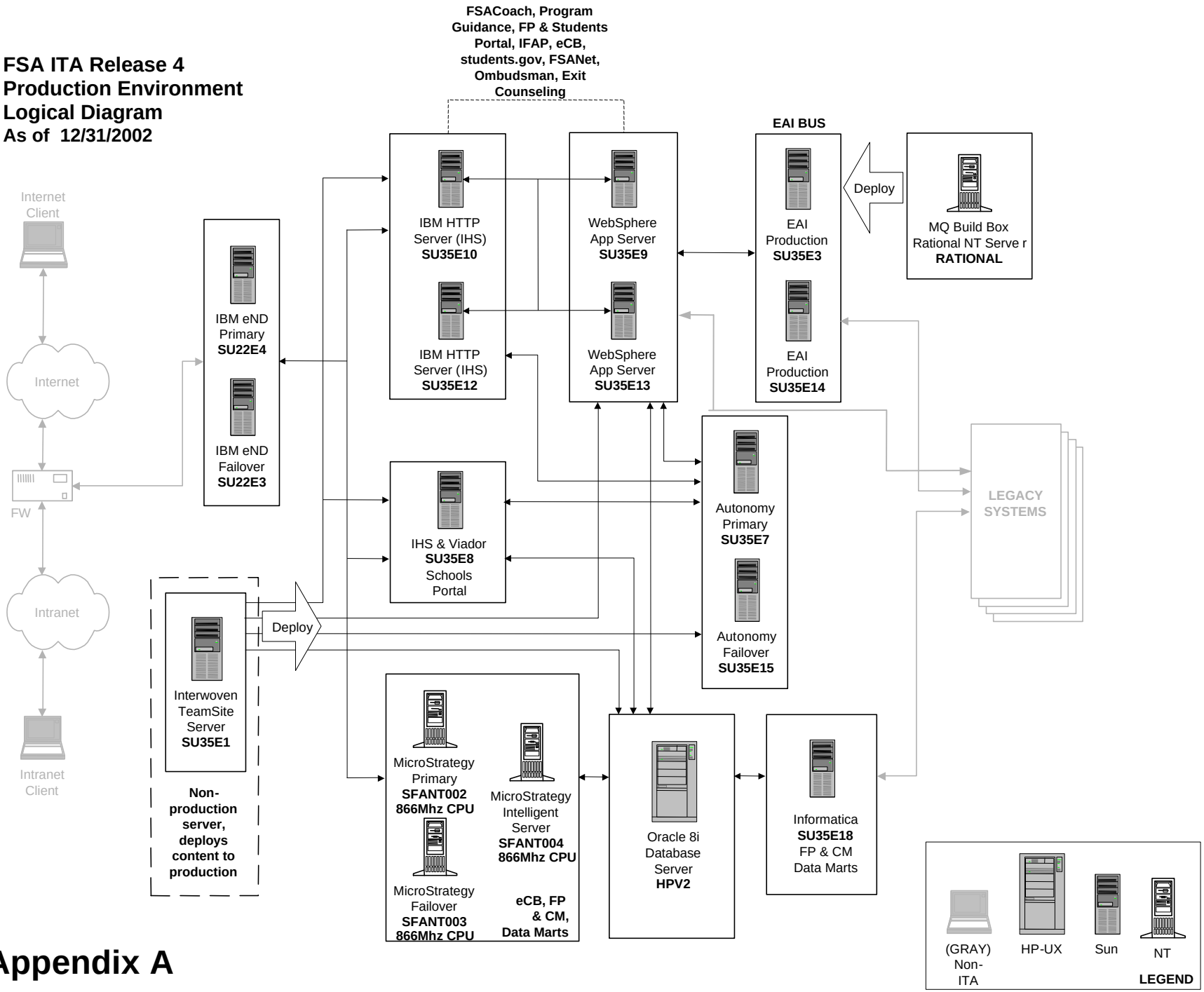

Appendix A

FSA ITA Release 4
Production Environment
Physical Diagram
As of 12/31/2002

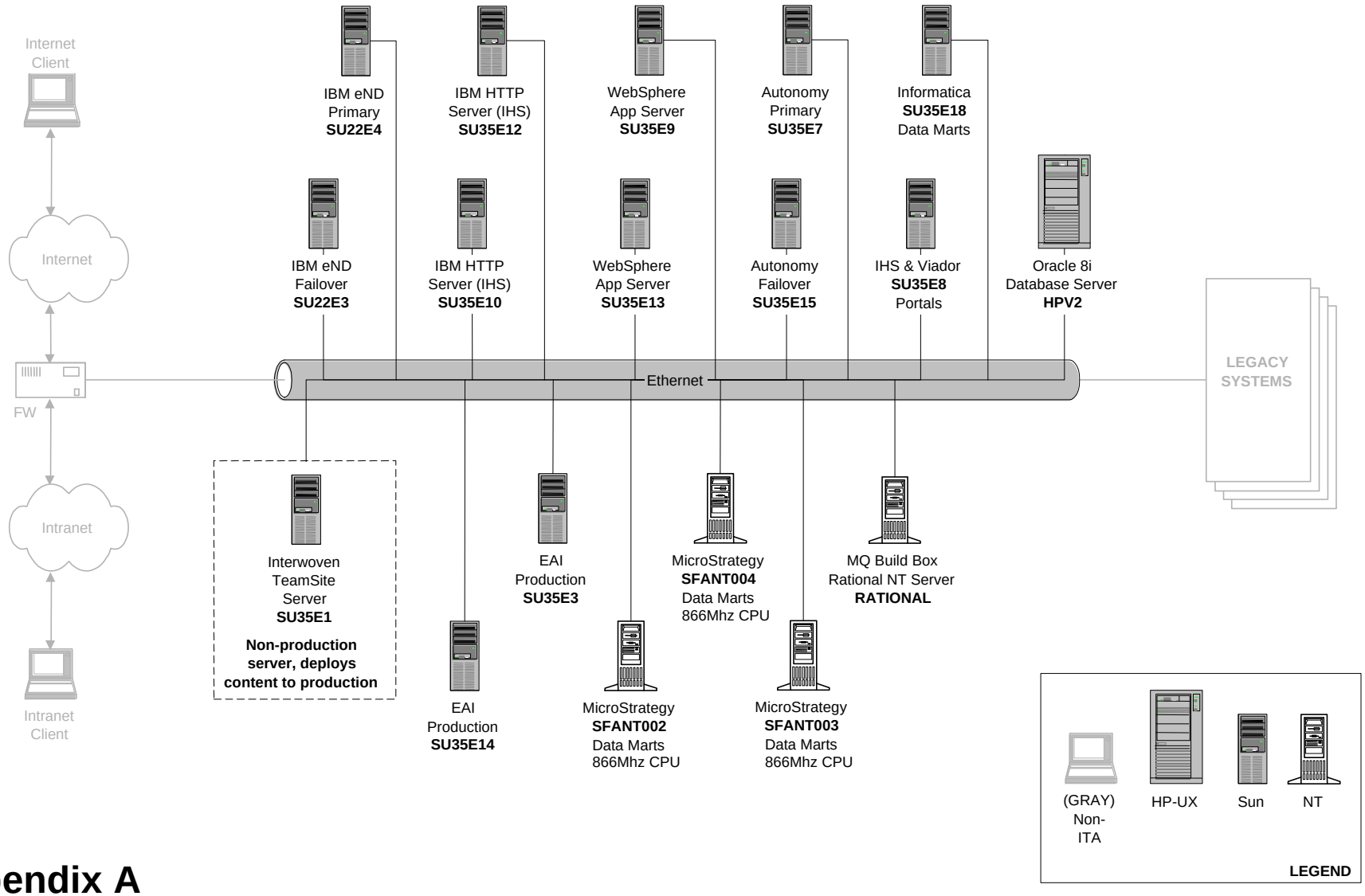

Appendix A

FAFSA on the Web 7.0
Non-Peak Production Environment
12/31/2002

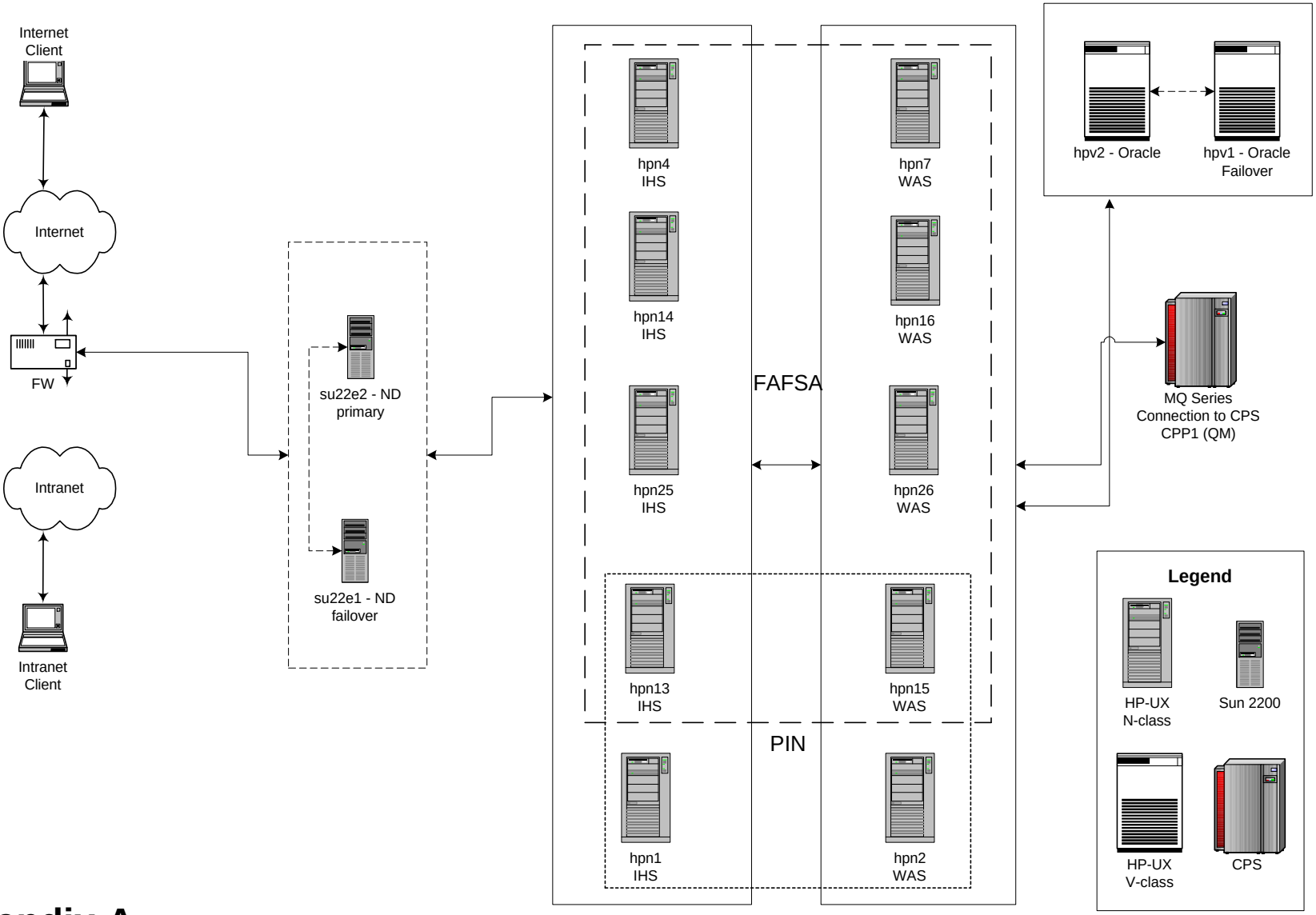

Appendix A