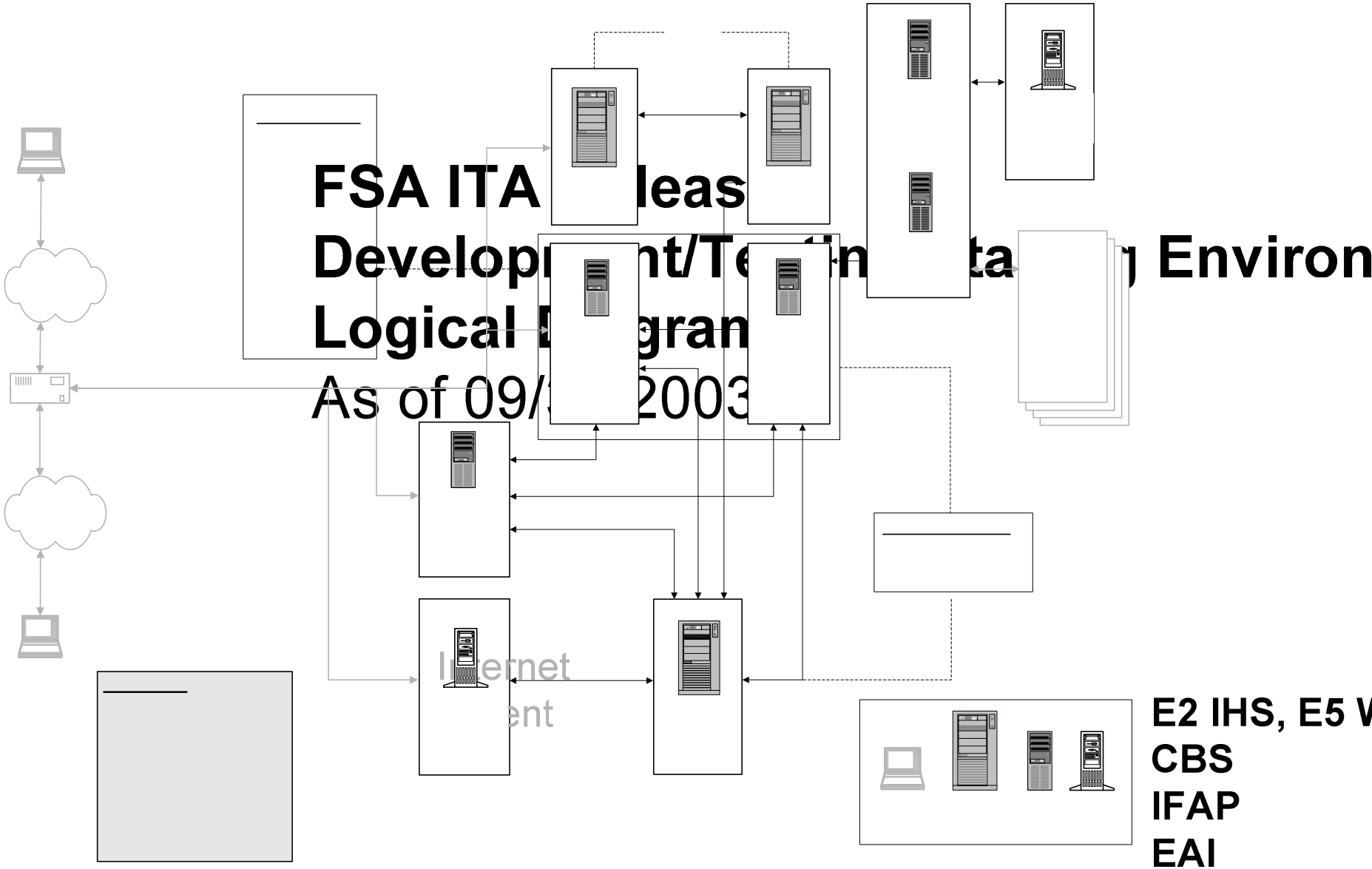
FSA ITA leas
Developm nt/Te in ta g Environ
Logical Diagram
As of 09/ 2003
Internet
ent
E2 IHS, E5 W
CBS
IFAP
EAI
ITA
FSANet
FP Portal

Appendix A

FSA ITA Release 4 Development/Testing/Staging Environme Physical Diagram

As of 09/30/2003

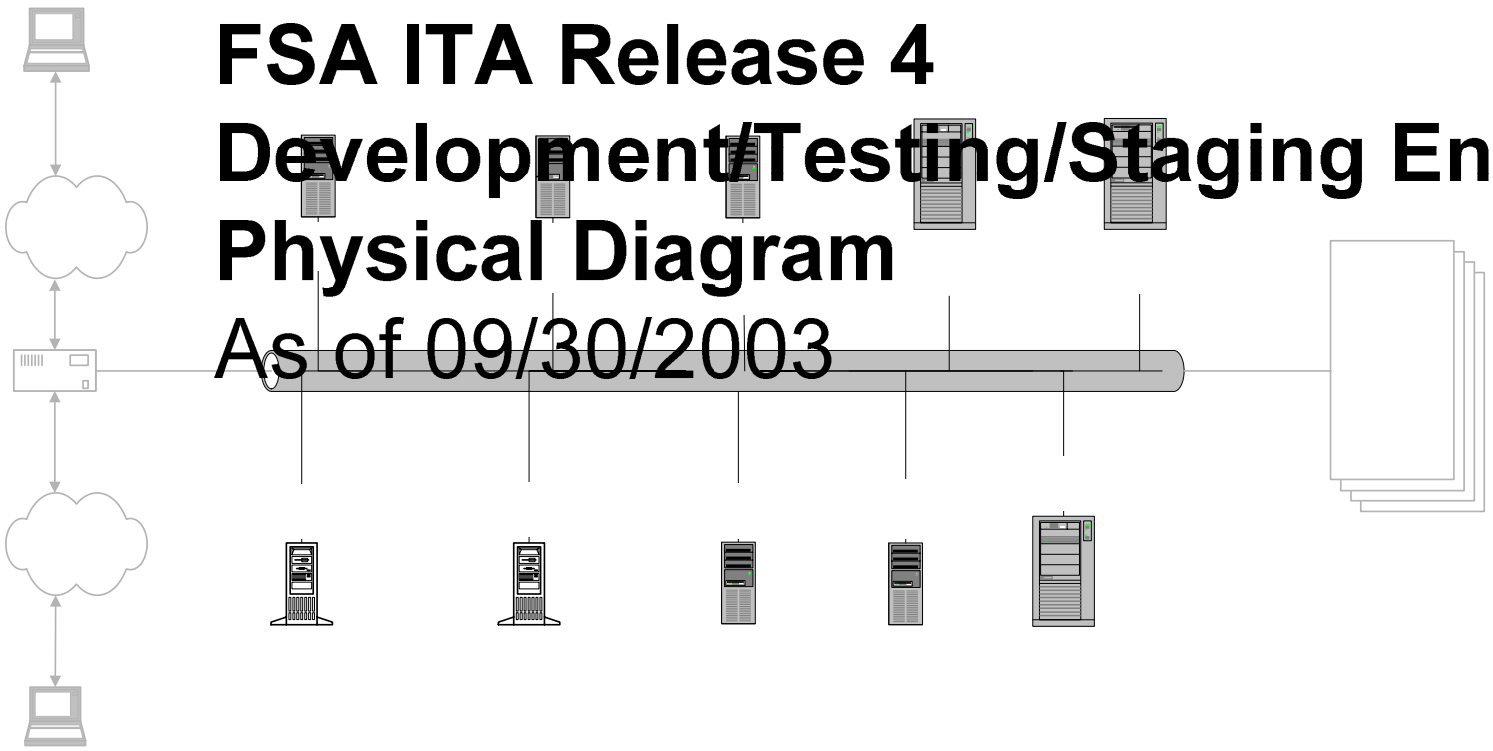

Internet
Client

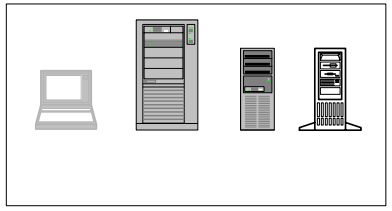

Appendix A

SU35E1

Schools Portal Ser

ESA Rele 4
erfo ance st Environment
ogical Diagram
s c

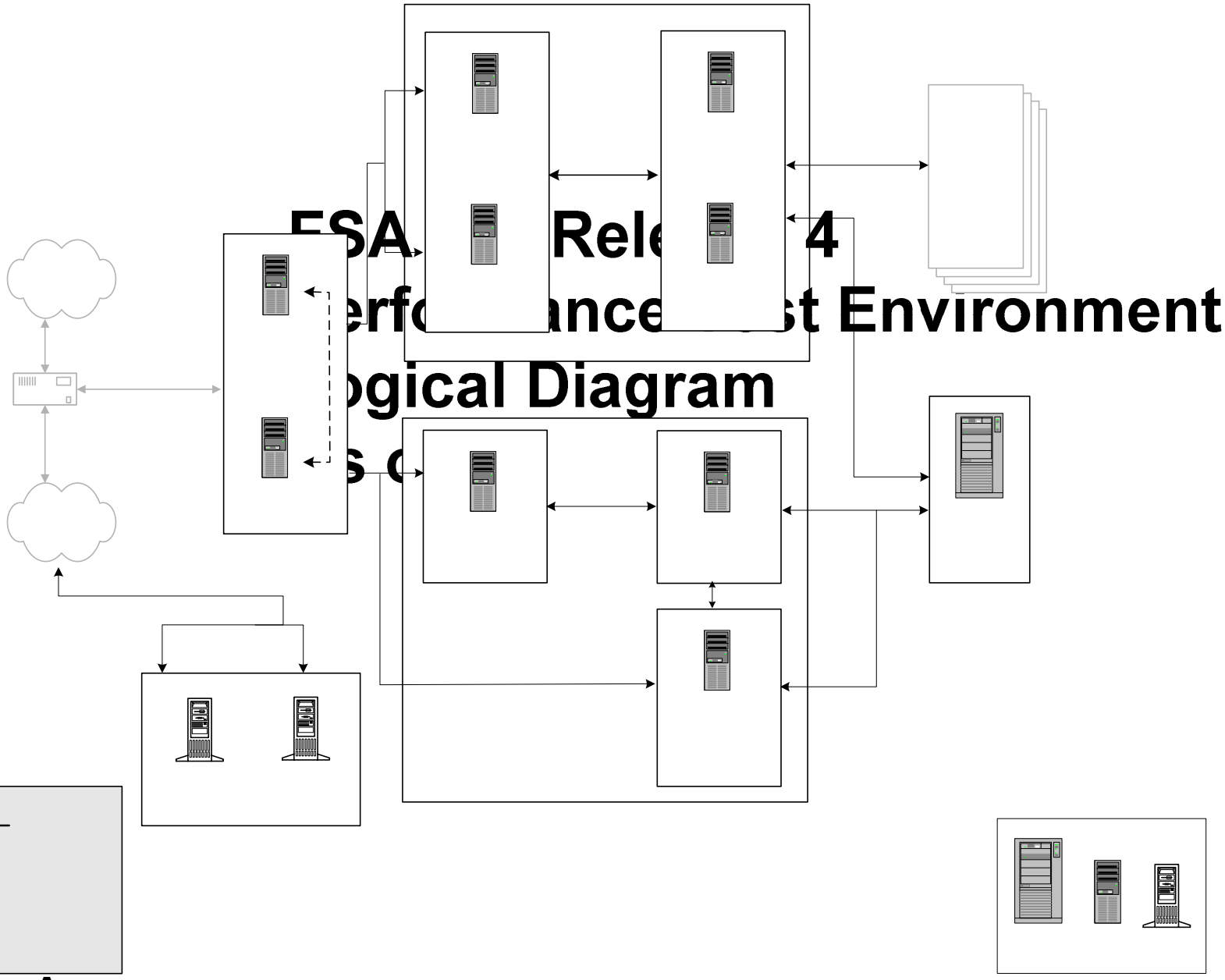

Appendix A

USA ITA Release 4
Performance Test Environment
Physical Diagram
As of 09/30/2003

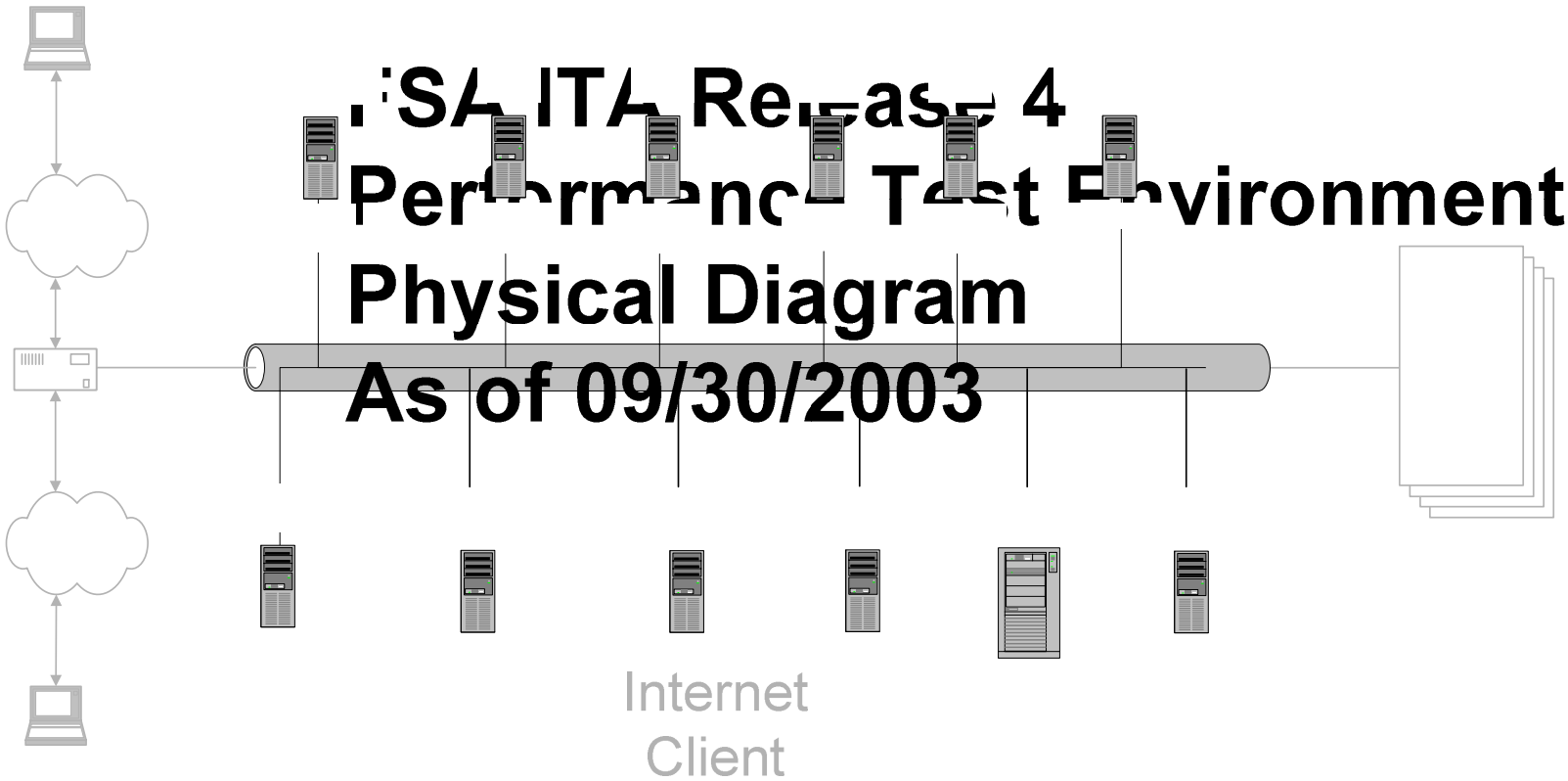

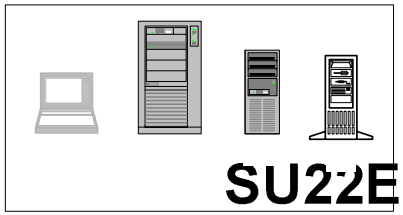

Appendix A